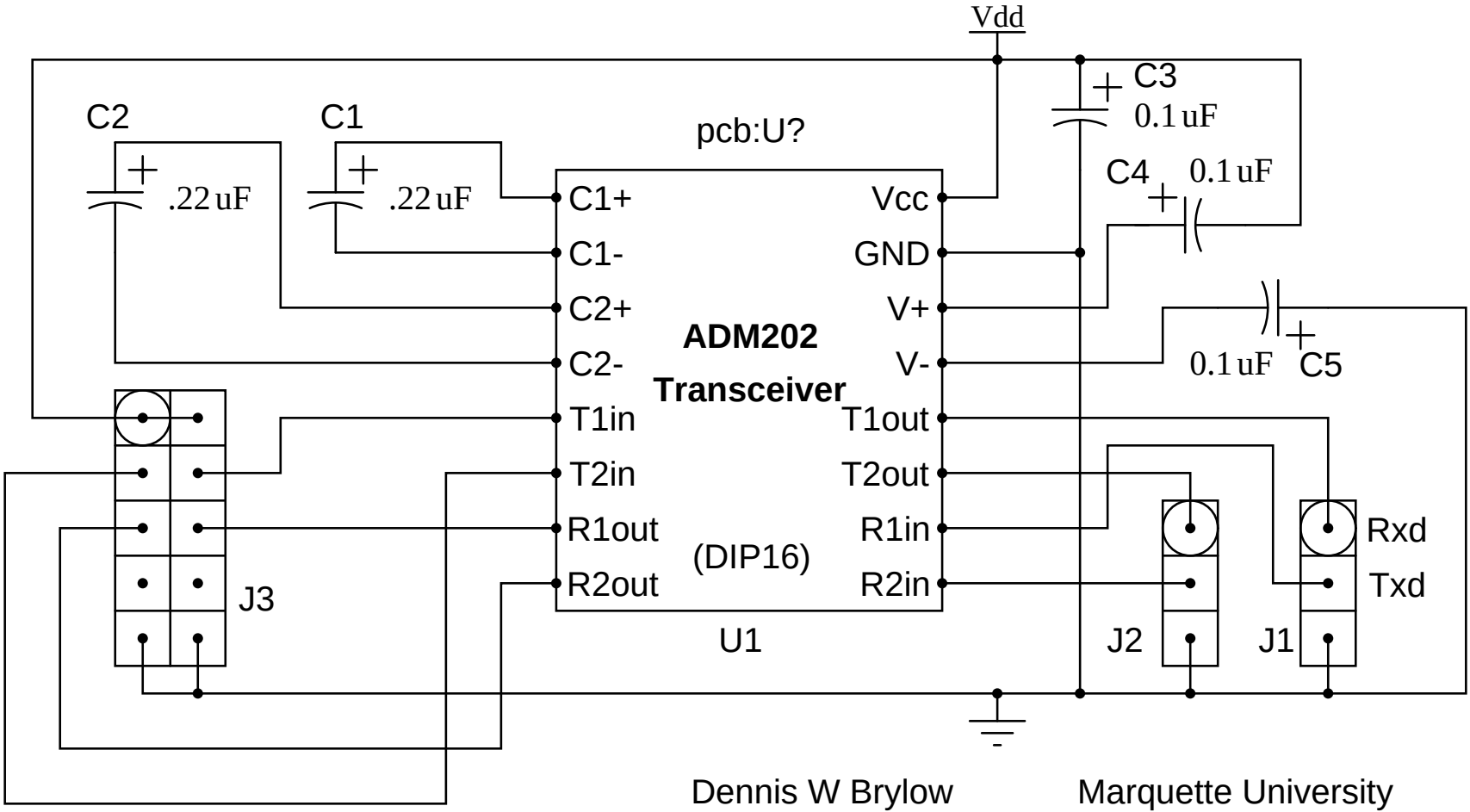

Dennis W Brylow
2007 Dec 20
RS232 Transceiver for WRT54GL routers

Marquette University
xinutran.ps